Eclypse™ ECY-PTU-107/207/208 Connected Terminal Unit Controller

Product Description

The Eclypse Connected Terminal Unit Controller (ECY-PTU) is designed to control terminal units such as fan coil units, chilled beams, ceilings, and heat pumps.

It integrates a control, automation and connectivity server, a power supply, and dedicated I/Os in one convenient package. Each model supports BACnet/IP communication and is listed as a BACnet Building Controller (B-BC) and feature wired and wireless advanced IP connectivity for efficient and reliable installation.

The ECY-PTU comes with an embedded web server that enables web-based application configuration and an HTML5 visualization interface. It also features embedded scheduling, alarming, and logging. Control logic and graphic user interface can be customized as required for the application.

Moreover, as part of the Smart Room Control solution, these controllers can control lighting fixtures (DALI, ON/OFF, dimming) and shades/sunblind motors (24 VDC or 100-240 VAC, up/down and angle rotation) through additional expansion modules.

General Installation Requirements

For proper installation and subsequent operation of each controller, pay special attention to the following recommendations:

- ☐ Upon unpacking the product, inspect the contents of the carton for shipping damages. **Do not install damaged modules**.
- ☐ Avoid areas where corroding, deteriorating, or explosive vapors, fumes or gases may be present.
- ☐ Ensure the mounting surface can support the controller, DIN rail, and any user-supplied enclosure.
- ☐ Allow for proper clearance around the controller's enclosure, and wiring terminals to provide easy access for hardware configuration and maintenance, and to ventilate heat generated by the controller.
- ☐ The controller's datasheet specifies the power consumption (amount of heat generated), the operating temperature range, and other environmental conditions the controller is designed to operate under.
- ☐ Ensure that all equipment is installed according to local, regional, and national regulations.
- ☐ If the product is used and/or installed in a manner not specified by Distech Controls, the functionality and the protection provided by the product may be impaired.
- ☐ SELV (Separated Extra Low Voltage) inputs/outputs must be connected to other SELV equipment inputs/outputs.
- ☐ PELV (Protective Extra Low Voltage) inputs/outputs must be connected to other PELV equipment inputs/outputs.
- ☐ It is recommended that the controller(s) be kept at room temperature for at least 24 hours before installation to allow any condensation that may have accumulated due to low temperature during shipping/storage to evaporate.

DISTECH CONTROLS™

- ☐ Orient the controller with the ventilation slots towards the top to permit proper heat dissipation. When installed in an enclosure, select one that provides sufficient surface area to dissipate the heat generated by the controller and by any other devices installed in the enclosure. A metal enclosure is preferred. If necessary, provide active cooling for the enclosure.
- ☐ Do not drop the controller or subject it to physical shock.
- ☐ The controller must be installed in an appropriate ventilated enclosure, which minimum dimensions are 240 x 240 x 100 mm.
- ☐ If the controller is to be mounted on a metallic support, this same metallic support is to be connected to a protective earth.
- ☐ Equipment without terminal block covers must be wall-mounted or DIN rail-mounted inside a supplementary enclosure (rated as IP20 or better) that can only be accessed by qualified personnel.
- ☐ Equipment with terminal block covers can only be wall-mounted on a flat surface that is sufficiently large to provide space around the equipment. In this installation scenario, conductors must be made inaccessible and wiring must comply with local wiring regulations and methods appropriate for fixed equipment installation in a building (the use of trunking for example).
- ☐ UL-compliant installation requires the product to be installed in a certified electrical safety box.

Any type of modification to any Distech Controls product will void the product's warranty.

Operating, handling, or servicing this product should be ensured by a qualified operator. Turn off the power before any kind of servicing.

Take reasonable precautions to prevent electrostatic discharges to the product when installing, servicing, or operating it. Discharge any accumulated static electricity by touching a grounded object with your hand before handling the product.

Device Markings (Symbols)

Certain markings (symbols) can be found on the controller and are defined as follows:

Symbol	Description
CE	CE marking: This device conforms to the requirements of applicable EC directives.
UK CA	UKCA marking: This device conforms to the requirements of applicable Great Britain regulations.
	Double Insulation marking: These controllers are built using double insulation.
	Products must be disposed of at the end of their useful life according to local regulations.
	Read the Hardware Installation Guide for more information.
	For indoor use only.
c UL us LISTED	UL marking: This device conforms to the requirements of the UL certification.
FC	FCC marking: This device complies with FCC rules part 15, subpart B, class B.
	Warning Symbol: Significant information required. Refer to the Hardware Installation Guide.
	HIGH VOLTAGE Symbol: Direct contact will cause electrical shock or burn.
~	Alternating Current
⎓	Direct Current
L	Line
N	Neutral
	Functional Earth. (CEI 60417 n° 5018)

General Wiring Recommendations

Risk of Electric Shock: Turn off power before any kind of servicing to avoid electric shock.

- ☐ All wiring must comply with electrical wiring diagrams as well as national and local electrical codes.
- ☐ To connect the wiring to a device, use the terminal connectors. Use a small flat screwdriver to tighten the terminal connector screws once the wires have been inserted (strip length: 0.25'' (6 mm), maximum tightening torque 0,4 Nm (3.45 in-lb)).
- ☐ Comply with all network and power supply guidelines outlined in the Network Guide.
- ☐ Keep wiring separate according to their function and purpose to avoid any ambient noise transmission to other wires. Use strapping to keep these wires separated. For example, keep power, hazardous voltage, SELV, PELV, network, and input wiring separate from each other.
- ☐ Keep input and output wiring in conduits, trays or close to the building frame if possible.
- ☐ Power type cables (i.e. for power, 3-wire voltage and current inputs and outputs) should be kept apart from other types of wiring to avoid any ambient noise transmission to other wires.
- ☐ Keep all wires away from high speed data transmission cables (for example, Ethernet, etc.).
- ☐ Conductors must be made inaccessible and wiring must comply with local wiring regulations and methods appropriate for fixed equipment installation in a building.
- ☐ Installation must be carried out in a fashion such that double insulation integrity is maintained.
- ☐ The maximum number of devices on one trunk should be below 50 devices to ensure proper communication and reduce leakage current effect.
- ☐ If all controllers are connected to the Same Main supply voltage with proper GFI, the default current will be limited by the GFI. The current leakage value of a single controller is below < 0,5 mA rms.
- ☐ Each controller has a leakage current at the ground of less than 0.5 mA rms. This leakage current must be taken into account when designing the electrical installation to protect against electrical shock in the case where a shielded ethernet cable is used.
- ☐ Always use unshielded cabling with a minimum Category 5 (CAT5) cable for ethernet communications.
- ☐ However, if shielded ethernet cables are used, a functional earth must be connected to the functional earth or COM terminal of the inputs of each controller. The functional earth connection can also be done using the ports of the switch used to ensure a return path to the ground for leakage current. The differential protection to the earth must be adapted accordingly.

Module Enclosure Dimensions

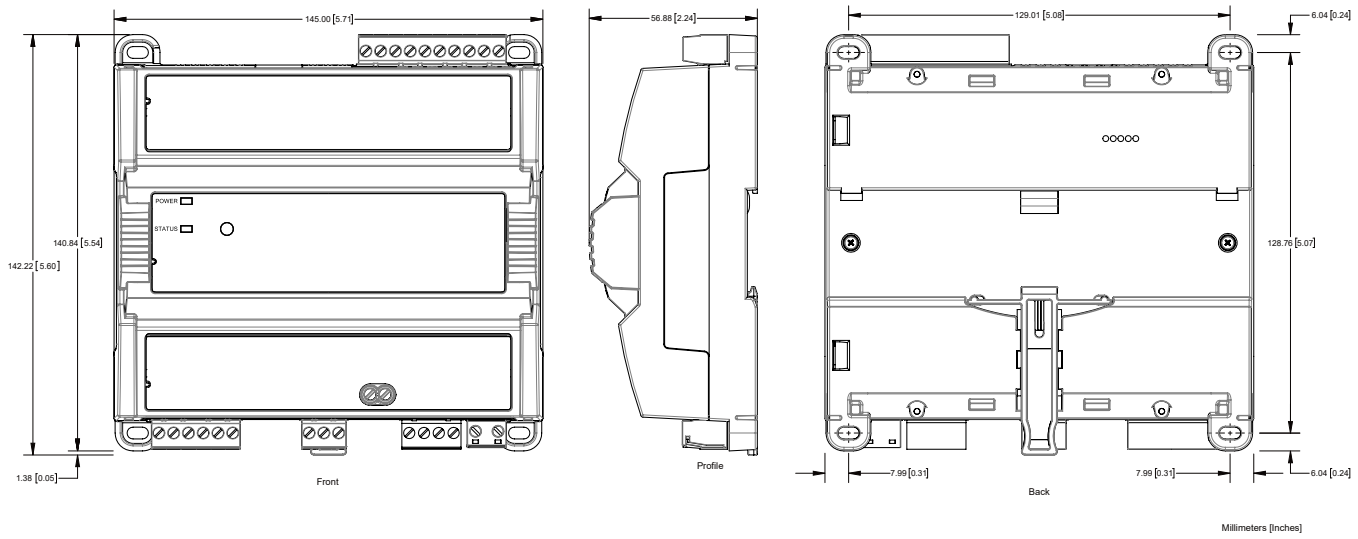

Figure 1: Dimensions without terminal covers

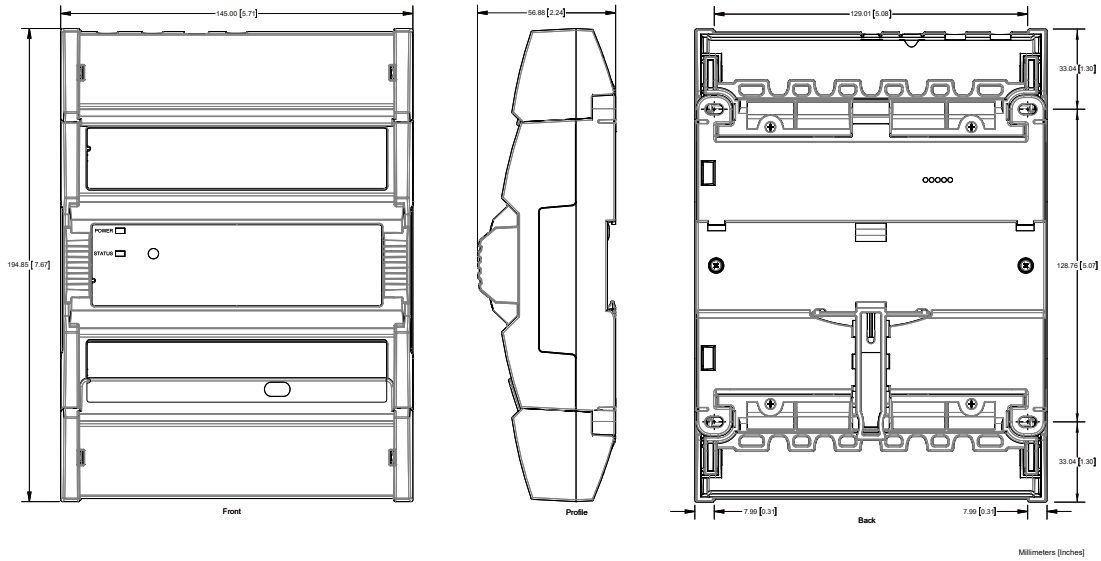

Figure 2: Dimensions with terminal covers

Mounting Instructions

The controller can be mounted on a DIN rail for fast installation and easier maintenance. The controller also has four mounting holes to be mounted in a panel or on a wall.

If the controller is to be installed out of an electrical box, it is a must to use the optional terminal block cover.

Ensure that the mounting surface can support the controller, DIN rail, and any site-supplied enclosure.

The controller must be mounted in a horizontal position as indicated in this guide to ensure proper airflow and heat dissipation. Any other position may cause excess heat accumulation and may result in a damaged controller.

Mounting Positions

The controller's mounting orientation must be horizontal with controller's back attached to a vertical wall surface.

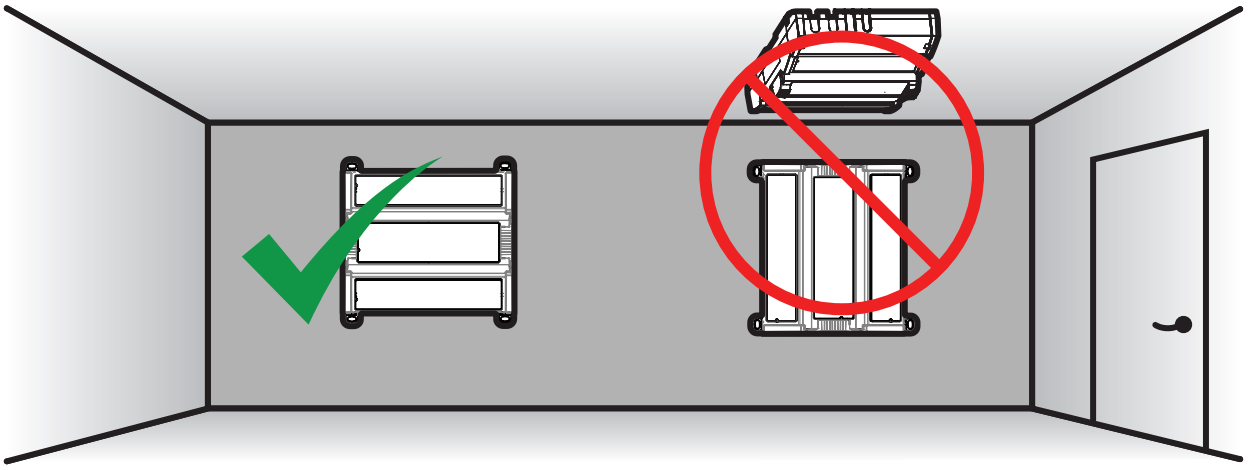

Figure 3: Permitted Mounting Position

DIN Rail-Mounted Installation

1. Securely mount the DIN rail horizontally on the wall.
2. Clip the controller onto the DIN rail.

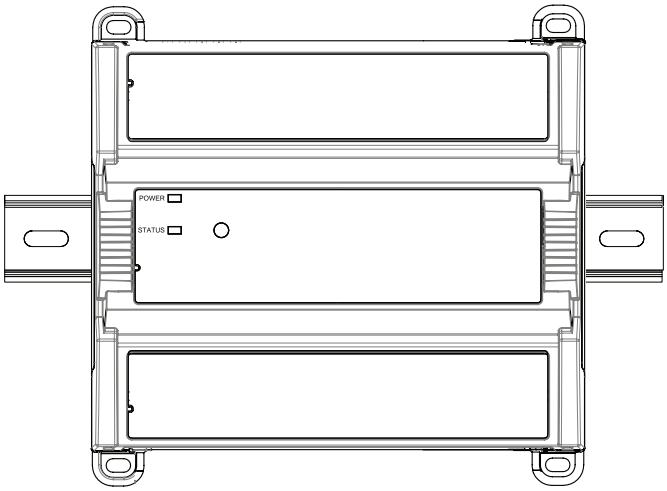

Figure 4: DIN-rail mounted controller

3. To detach the controller from the DIN rail, use a flat screw driver to pull down on the release clip located at the bottom center of the controller and pull it off the DIN rail, bottom first.

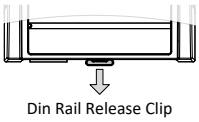

Figure 5: Typical DIN Rail-Mounting Release Clip

Wall-Mounted Installation

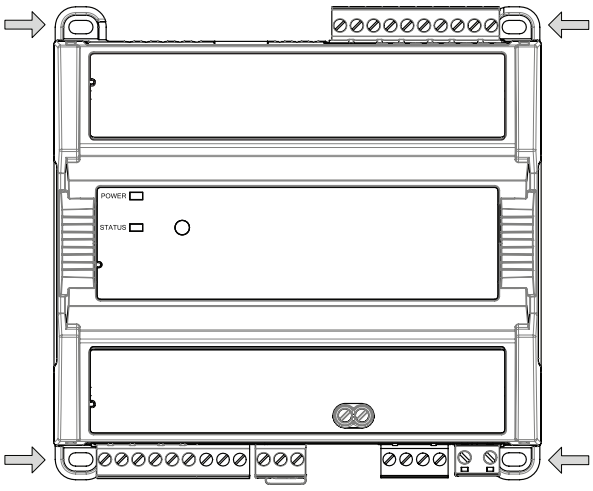

Figure 6: Mounting hole positions

1. Use the mounting holes to mark the location of any holes that need to be drilled.
2. Drill the holes.
3. Clean the surface
4. Mount the module using a No. 8 slotted hex, size: 1/4" or equivalent mounting hardware appropriate to the wall material type.

Figure 7: Appropriate Mounting Hardware (Field Supplied)

Power Wiring

Overvoltage Category	II - 2.5 kV
Voltage	100-240 VAC; ±10%
Maximum Consumption	4 A

For terminal block connector wiring best practices, see General Wiring Recommendations.

Always conform to the wiring regulations in effect in your jurisdiction.

The power supply must be connected to the mains using the provided detachable connector.

The power wires must be between 18 AWG (1 mm²) and 16 AWG (1.5 mm²). Use wire with appropriate insulation for this application.

Operating, handling, or servicing this product must be performed by trained personnel only. Turn off power before any kind of servicing.

Risk of electric shock. Do not open. This product has no user-serviceable parts inside. When power has been disconnected, dangerous residual internal voltages may still be present. Return this unit to Distech Controls for maintenance or repair.

Always use unshielded cabling with a minimum Category 5 (CAT5) cable for ethernet communications.

However, if shielded ethernet cables are used, a functional earth must be connected to the functional earth or COM terminal of the inputs of each controller. The functional earth connection can also be done using the ports of the switch used to ensure a return path to the ground for leakage current. The differential protection to the earth must be adapted accordingly.

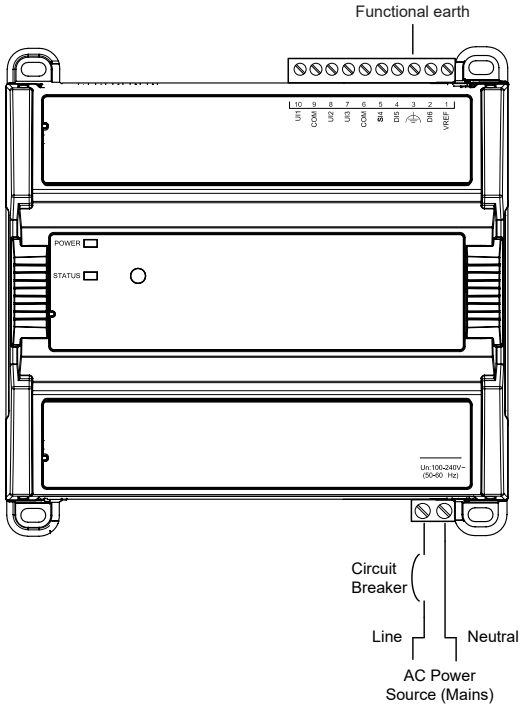

Figure 8: Power Wiring

Input Wiring

Input options must be properly configured in EC-*gfx*Program to ensure correct input readings. For terminal block connector wiring best practices, see General Wiring Recommendations. Inputs can be connected as follows.

Before connecting a sensor to the controller, refer to the installation guide of the equipment manufacturer.

- ☐ For a wire length less than 10’ (3m), either a shielded or unshielded 18AWG wire may be used.
- ☐ For a wire up to 33’ (10m) long, a shielded 18AWG wire is recommended.
- ☐ The shield of the wire should be grounded on the controller side only and the shield connection to the ground should be kept as short as possible.
- ☐ If functional earth is connected, input circuits will be PELV.
- ☐ If functional earth is NOT connected, input circuits will be SELV.

Sensor Input Type	Input Designation	Input Connection Diagram
☐ Dry Contact input. ☐ Pulsed input.	☐ UIx ☐ DIx ☐ SIx	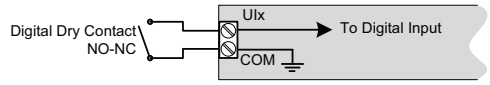
☐ Pulse input used with a 2-wire sensor powered by its own power source. ☐ This input supports a maximum input frequency of 100Hz (5ms minimum ON/OFF) for DIx, or 1Hz (500ms minimum ON/OFF) for UIx and SIx. ☐ Connect the pulse input according to the figure for a pulse meter that can pull-down a +3.3VDC supply with a 1kΩ (for DIx) or 10kΩ (for UIx and SIx) pull-up resistor (Internal supply type).	☐ DIx ☐ UIx ☐ SIx	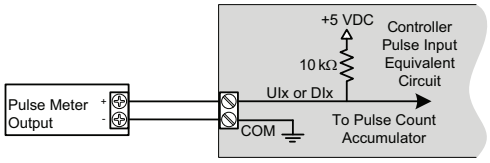
☐ Thermistor Input (for example, 10kΩ type II and III).	☐ UIx ☐ SIx	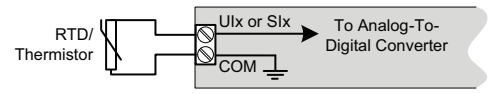
☐ Resistive input, maximum 350kΩ (for example, use with 10kΩ and 100kΩ potentiometers).	☐ UIx ☐ SIx	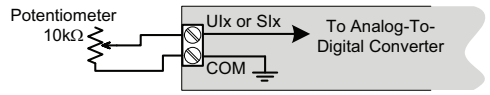
☐ Voltage input used with a 3-wire 0 to 10VDC or 0 to 5VDC sensor powered by an external 24 AC/DC power supply.	☐ UIx	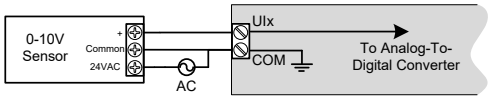
☐ Voltage input used with a 0 to 10VDC or 0 to 5VDC sensor powered by its own power source.	☐ UIx	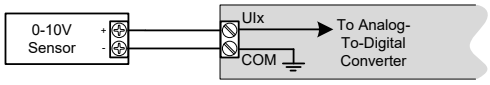

Output Wiring

Output options must be properly configured in EC-*gfx*Program to ensure correct output values. The table below shows the available output wiring methods. Outputs can be connected as follows.

Before connecting an output device (actuator, relay, etc.) to the controller, refer to the datasheet and installation guide of the equipment manufacturer.

- ☐ For a wire length less than 10’ (3m) long, either a shielded or unshielded 18AWG wire may be used.
- ☐ For a wire length up to 33’ (10m) long, a shielded 18AWG wire is recommended.
- ☐ The shield of the wire should be grounded on the controller side and the shield connection to the ground should be kept as short as possible.

- ☐ For relay and triac outputs; select appropriately-sized wiring suitable to the current load.

Relay Contact Outputs (typically fan speeds)

Three relay contact outputs (DO1, DO2 & DO3) can switch up to 3 A (inductive / resistive - total of all fan relay contact outputs) for fan speed control.

- ☐ The fan relay contacts provide the same voltage as the controller’s power input (100-240 VAC).
- ☐ The fan relay contact outputs are normally open.
- ☐ All fan relay contact output connectors accept wires between 1 mm² (17 AWG) and 1.5 mm² (16 AWG). Select proper gauge according to the current load.

☐ It is recommended to use an appropriate external protection if connected to a highly inductive load.

Description	Designation	Connection Diagram
Fan speed	DO1-DO2-DO3	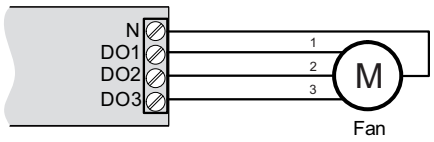

Electric Heater

The relay contact output (DO4-C4) can switch up to 9 A (resistive) for electric heater control up to 240 VAC. For example, this output can handle electric heaters up to 2 kW @ 230 VAC.

- ☐ If more power is needed, a relay must be connected to the relay contact output.
- ☐ The heater relay outputs are unpowered. You must use the same Live conductor (power source) to power the heater as the one used to power the controller.
- ☐ All digital relay contact outputs are normally open.
- ☐ All relay contact output connectors accept wires between 1.5 mm² (16 AWG) and 2.5 mm² (14 AWG). Select proper gauge according to the current load.
- ☐ It is recommended to use an appropriate external protection when connected to a highly inductive load.
- ☐ It is recommended to use a 10 A fast-acting, high-breaking fuse to protect the heater relay contact output against short circuit/overload conditions.

Description	Designation	Connection Diagram
Electric heat	DO4-C4	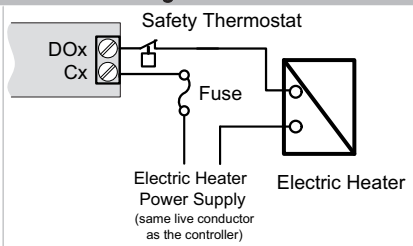 Relay Contact outputs - Electric Heater ($I_{Electric\ Heater} < I_{Max}$) 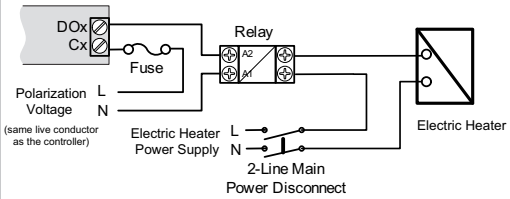 Relay Contact outputs - Electric Heater ($I_{Electric\ Heater} > I_{Max}$)

Triac Outputs

Triac outputs can be used to turn equipment and devices on and off (two-state outputs) and to control valve and damper actuators using Pulse Width Modulation (PWM).

- ☐ ECY-PTU-107/207: Same voltage as power supply (100-240 VAC – 0.5 A max. per output)
- ☐ ECY-PTU-208: Low voltage (24 VAC - 600 mA total with all outputs combined, including 24 V outputs).
- ☐ To measure the state of a triac output, an external load must be connected.
- ☐ Triac output connectors accept wires between 1 mm² (17 AWG) and 1.5 mm² (16 AWG). Make sure the wires are suitable for the connected loads.
- ☐ For ECY-PTU-208: A fuse is not necessary when the onboard 24 VAC output is being used with the triac outputs as the controller has a built-in short circuit protection.
- ☐ For ECY-PTU-208: If functional earth is connected, triac output circuits will be PELV.
- ☐ For ECY-PTU-208: If functional earth is NOT connected, triac output circuits will be SELV.

Description	Designation	Connection Diagram
☐ Thermal Valve	☐ DO5-DO6	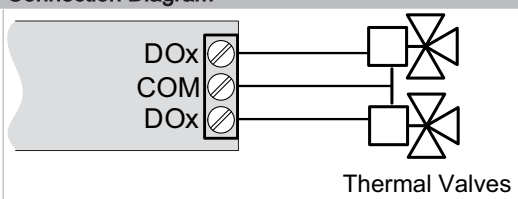

Description	Designation	Connection Diagram
☐ Proportional valve: requires two triac outputs	☐ DO5-DO6	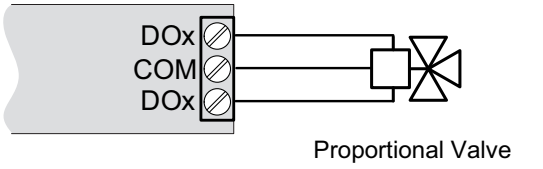

Analog Outputs

Analog outputs are configured to provide a linear signal ranging from 0 to 10 VDC.

- ☐ Analog output connectors accept wires between 0.75 mm² (18 AWG) and 1.5 mm² (16 AWG).
- ☐ If an analog actuator is being controlled, connect the 0 to 10 VDC output, along with an external 24 VAC power source, to the analog actuator.
- ☐ For ECY-PTU-208: The onboard 24 VAC power supply can be used to power 0-10 V actuators.
- ☐ If functional earth is connected, analog output circuits will be PELV.
- ☐ If functional earth is NOT connected, analog circuits will be SELV.

Control Output Type	Designation	Connection Diagram
☐ 0 to 10VDC voltage output.	☐ AOx	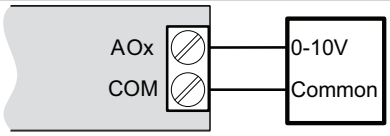
☐ 0 to 10VDC voltage output controlling an analog actuator powered by an external 24VAC power source	☐ AOx	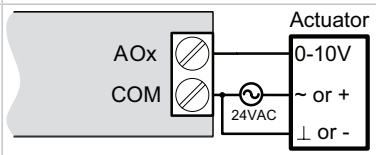
☐ 0 to 10VDC voltage output controlling an analog actuator powered by the controller (ECY-PTU-208 only)	☐ AOx	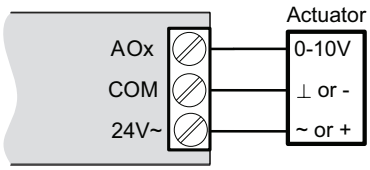

Communications Wiring

The Eclypse User Guide provides extensive information and requirements to implement a BACnet IP network. It contains information about network topology, wire length restrictions, cable type, device IP addressing, radio path planning (when the Eclypse Wi-Fi Adapter is connected to the controller), etc. It can be downloaded from our website. For optimal performance, use Distech Controls category 5e network cable or refer to the Eclypse User Guide for cable specifications.

Controllers are uniquely identified on the network by their MAC address. This identifier is printed on a label located on the side of the controller and on its shipping box. Get a printed copy of the building's floor plan. During controller installation, peel the MAC address stickers off of the shipping box and put it on the floor plan where the controller has been installed. This MAC address is used as part of the controller's factory-default Wi-Fi access point name and its network hostname.

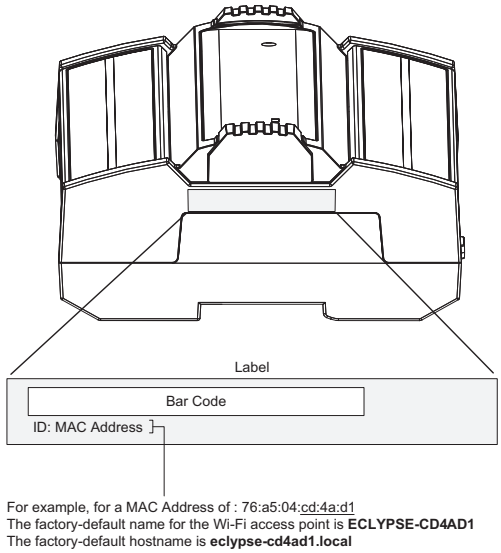

Figure 9: MAC Address Label Location

There are two methods to connect to the controller: wired (Ethernet connection) or wireless (when the Eclypse Wi-Fi Adapter is connected to the controller).

Wired Connection

Network connections can be daisy-chained.

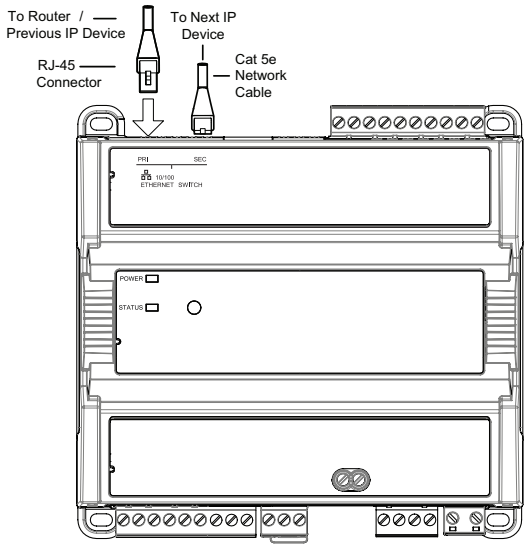

Figure 10: Communications wiring

Wireless Connection

Once the Eclypse Wi-Fi Adapter has been connected to the controller, a Wi-Fi hotspot becomes available that allows you to connect to the controller's configuration Web interface with your PC.

On your PC's wireless networks, look for an access point named **ECLYPSE-XXYYZZ** where **XXYYZZ** are the last 6 hexadecimal characters of the controller's MAC address (see above). The default password for the wireless network is: **eclypse1234**

Configuring the Controller

Any of the following methods can be used to connect to the controller's interface in order to configure it:

- ☐ Using the Xpress*Network* Utility
- ☐ Using the controller's factory-default Hostname in the Web browser
- ☐ Using the controller's IP address in the Web browser

Using the Xpress*Network* Utility

The Xpress*Network* Utility is a software application that runs on a PC that allows you to discover all ECY Series controllers connected to an IP network's subnetwork or Wi-Fi network and to perform a range of operations on many controllers at once: you can set each controller's Hostname and IP address, launch EC-*gfx*Program to program the controller, or you can access the controller's configuration Web interface. See the Xpress*Network* Utility User Guide for more information.

Xpress*Network* Companion mobile app can be installed on your smartphone and it works with the QR code marked on the controller's faceplate which encodes the controller's MAC address and host ID. By scanning the QR code, the app records this information to which you assign a hostname. Once the QR codes for all controllers have been read in, the app's information is transferred to the Xpress*Network* Utility where it is used to populate the relevant data fields. See the Xpress*Network* Utility User Guide for more information.

Figure 11: Typical QR Code

Using the Controller's Factory-default Hostname in a Web Browser

Controllers have a factory-default hostname that you can use instead of an IP address to connect to it. The hostname can be used in a Web browser's address bar or in the EC-*gfx*Program's **Connect to** screen. When installing the latest version of EC-*gfx*Program and your PC does not have the Bonjour service installed, a link to install the Bonjour service is provided. The Bonjour service must be installed on your PC to allow your PC to discover controllers by their hostname.

If your PC is unable to resolve the controller's hostname, you must connect your PC to the controller through Ethernet or Wi-Fi so that your PC only sees the controller network. For example, in this case, your PC must be disconnected from all other networks such as a corporate network or the Internet. If necessary, temporarily disconnect your PC's network cable from its Ethernet port.

The controller's factory-default hostname is **eclypse-xxxxxx.local** where **xxxxxx** is the last 6 characters of the MAC address printed on a sticker located on the side of the controller. See above.

For example, the sticker on the side of a controller shows that its MAC address is 76:a5:04:cd:4a:d1. Connect to the controller's Web interface as follows:

1. Open your Web browser.
2. In the Web browser's address bar, type **https://eclypse-cd4ad1.local** and click go.
3. Login to the controller. Then set the controller's configuration parameters in the controller's configuration Web interface. See Connecting to the Controller's Configuration Web Interface.

Using the Controller's IP Address in a Web Browser

Connect to a controller through its IP address as follows:

☐ For a Wi-Fi Network Connection:

1. Open your Web browser.
2. In the Web browser's address bar, type **https://192.168.0.1** (the controller's factory-default wireless hotspot IP address) and click go.
3. Login to the controller. Then set the controller's configuration parameters in the controller's configuration Web interface. See Connecting to the Controller's Configuration Web Interface.

☐ **For an Ethernet Network Connection**: You must know the controller's current IP address (from the DHCP server for example).

1. Open your Web browser.
2. In the Web browser's address bar, enter the controller's IP address and click go.
3. Login to the controller. Then set the controller's configuration parameters in the controller's configuration Web interface. See Connecting to the Controller's Configuration Web Interface.

Connecting to the Controller's Configuration Web Interface

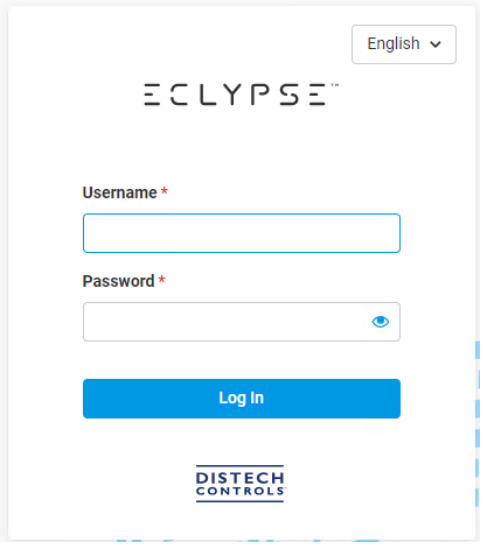

At the first connection to an Eclypse Controller you will be forced to change the password to a strong password for the admin account to protect access to the controller.

In Network Settings, configure the controller's network parameters so that they are compatible with your network. See the Eclypse User Guide for more information about network settings and how to secure the controller. It is important to create new user accounts with strong passwords to protect the controller from unauthorized access. Remove the factory default admin account as this is a commonly known security breech (only the password for this user account needs to be compromized).

Subnet Wiring

Supported Allure Series communicating sensors are connected to the **SUBNET** port modular connector of the controller with a standard Category 5e Ethernet patch cable fitted with RJ-45 connectors.

The Eclypse User Guide provides extensive information and requirements for the connection of an Allure series communicating sensor. It contains information about network topology and length, cable type, setting the Subnet ID, etc. It can be downloaded from our website. See also the Hardware Installation Guide supplied with the Allure series communicating sensor.

M-Bus Communications Wiring

For Eclypse Facilities controllers, ensure that you have at least a C1 Connectivity Pack to enable the M-Bus functionality. See the controller's Spec Sheet for more details.

M-Bus communications are made by connecting meters directly in an M-Bus port.

The controller provides an M-Bus port when connected to an ECY-MBUS extension module via a USB connection.

The M-Bus port must be configured in EC-*gfx*Program prior to use. M-Bus meters are integrated into EC-*gfx*Program using the M-Bus device block.

Maximum M-Bus Device Wiring Length

The following information provides wiring limitations for M-Bus devices. The wiring length provided below was tested as a worst-case scenario with all meters being located at the end of the bus. If meters are more evenly spaced along the bus, then the maximum wiring length can possibly be increased.

Testing Conditions:

Current per slave/meter	1.5 mA
Max ΔV accepted on the bus	2 V
Cable capacity	110 nf/km

USB Connection:

M-Bus Meters	AWG 15			AWG 22		
	300 Bps	2400 Bps	9600 Bps	300 Bps	2400 Bps	9600 Bps
3	12000 m (39370 ft)	4500 m (14763 ft)	2400 m (7874 ft)	4000 m (13123 ft)	2200 m (7217 ft)	1150 m (3773 ft)

Table 1: Maximum Wiring Length from the Controller to the Last M-Bus Meter on USB connection

Using the Reset Button

The reset button is located under the controller's cover. Depending on the amount of time the reset button is held down, different actions are taken by the controller. The STATUS LED will turn off after each time interval.

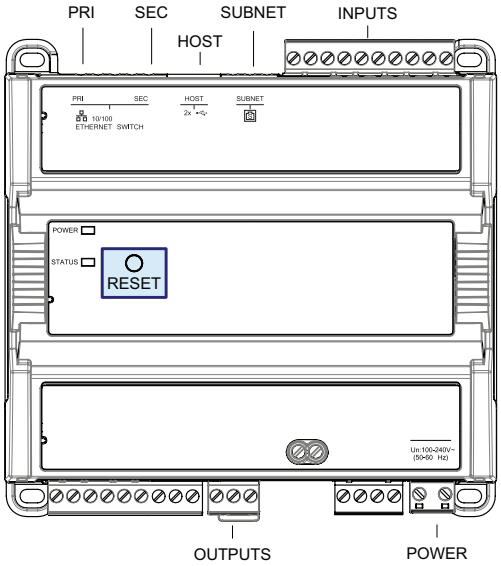

Figure 12: Reset button location

Hold Reset For	To
5 seconds	Restart / reboot the controller.
10 seconds	Reset both Ethernet and Wi-Fi IP addresses back to factory default settings.
20 seconds	Reset the controller to its factory default settings. User accounts (user names and passwords) will also be reset to the factory default settings and the controller license will be cleared. If FIPS has been enabled on the controller, this will turn FIPS off.

Always backup the controller's license through the controller's Web interface before you hold the controller's reset button for 20 seconds. Once the controller reboots, you will have to install the license through the controller's Web interface.

After you hold the controller's reset button for 20 seconds, the controller's HTTPS security certificates will be regenerated. If you use HTTPS to connect to the controller, you will no longer be able to connect to the controller from any PC that was used in the past to connect to the controller unless you delete the old HTTPS security certificate from these PCs.

Complementary Information

- ☐ This device is designed for type 1 action
- ☐ This device is designed for type 1.b action
- ☐ This device presents an A class software
- ☐ The EMC immunity test has been passed using 230 VAC and 0.5 A.
- ☐ The Ball Pressure Test temperature is 167°F (75°C)
- ☐ The SELV/PELV does not exceed 42 VDC
- ☐ The maximum accessible voltage is 35 VDC.
- ☐ All traveling cables permanently installed present an X type anchor.
- ☐ All cables must be able to operate above 176°F (80°C)
- ☐ This product is not repairable. If the device is physically malfunctioning or requires repair, it must be returned to Distech Controls.
- ☐ Pollution Degree 2
- ☐ Overvoltage Category II - 2.5 kV

Maintenance

Regular Maintenance

Each controller requires minimal maintenance, but it is important to take note of the following:

- ☐ Clean the outside of the controller by polishing it with a soft dry cloth.
- ☐ Using a torque limited screw driver set to 0.4 Nm (3.54 in-lb), retighten terminal connector screws annually to ensure the wires remain securely attached.

Disposal

The Waste Electrical and Electronic Equipment (WEEE) Directive sets out regulations for the recycling and disposal of products. The WEEE2002/96/EG Directive applies to standalone products, for example, products that can function entirely on their own and are not a part of another system or piece of equipment.

For this reason Distech Controls products are exempt from the WEEE Directive. Nevertheless, Distech Controls products are marked with the WEEE symbol, indicating devices are not to be thrown away in municipal waste.

Products must be disposed of at the end of their useful life according to local regulations and the WEEE Directive.

North American Emissions Compliance

United States

Changes or modifications not expressly approved by Distech Controls could void the user's authority to operate the equipment.

This equipment has been tested and found to comply with the limits for a Class B digital device, pursuant to Part 15 of the FCC Rules. These limits are designed to provide reasonable protection against harmful interference in a residential and commercial installation. This equipment generates, uses and can radiate radio frequency energy and, if not installed and used in accordance with the instructions, may cause harmful interference to radio communications. However, there is no guarantee that interference will not occur in a particular installation. If this equipment does cause harmful interference to radio or television reception, which can be determined by turning the equipment off and on, the user is encouraged to try to correct the interference by one or more of the following measures:

Reorient or relocate the receiving antenna.

Increase the separation between the equipment and receiver.

Connect the equipment into an outlet on a circuit different from that to which the receiver is connected.

Consult the dealer or an experienced radio/TV technician for help.

Canada

This Class (B) digital apparatus meets all the requirements of the Canadian Interference-Causing Equipment Regulations.

Cet appareil numérique de la Classe (B) respecte toutes les exigences du Règlement sur le matériel brouilleur du Canada.

Specifications subject to change without notice.
Eclypse, Distech Controls, the Distech Controls logo, EC-Net, Allure, and Allure UNITOUCH are trademarks of Distech Controls Inc. BACnet is a registered trademark of ASHRAE; BTL is a registered trademark of the BACnet Manufacturers Association. The Bluetooth® word mark and logos are registered trademarks owned by Bluetooth SIG, Inc. and any use of such marks is under license. All other trademarks are property of their respective owners.
©, Distech Controls Inc., 2016 - 2024 All rights reserved.
Global Head Office - 4205 place de Java, Brossard, QC, Canada, J4Y 0C4 - EU Head Office - ZAC de Sacuny, 558 avenue Marcel Mérieux, 69530 Brignais, France